Multifan

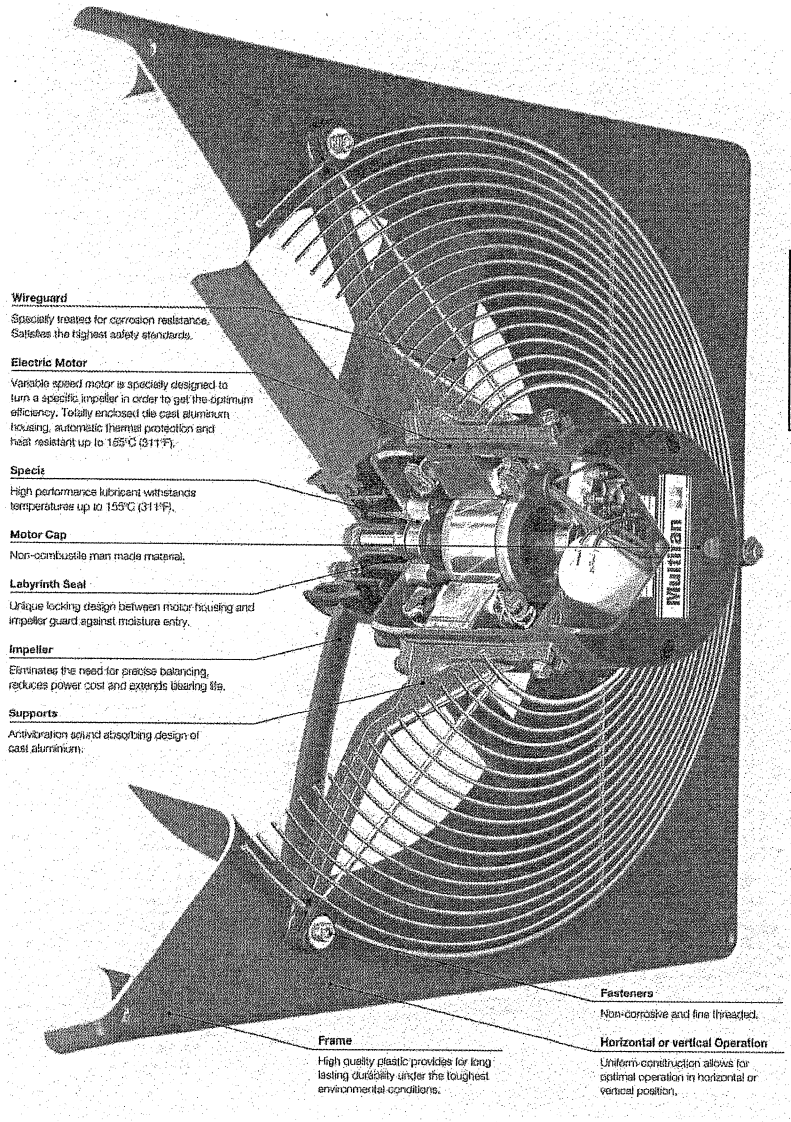

Panel Fans *(fiberglass frame)*

Technical Data

Application:
To serve as an exhaust fan or fresh air intake fan, usually mounted in a wall in either a horizontal or vertical position.

General Component Specifications:

- Sealed severe duty, wash down, Class F insulated, ball bearings, front & rear, motor.
- The motor is C-UL recognizable.
- UL507 certified (outdoor use).
- Glass filled, high impact, polypropylene fan blades.
- Heavy duty fiberglass frame (vacuum formed)
- Standard fan guard on motor side, optional fan guard on impeller side.
- Standard air flow is from motor cap to impeller, air flow can be reversed.
- Most single phase motors are speed controllable (optional transformer or electronic control)
- Most three phase motors are speed controllable with frequency controllers (not available at Vostermans).
- Motor covered by Vostermans limited 3 year warranty.

Vostermans Ventilation

Vostermans Ventilation Inc.
2439 South Main St.
Bloomington, IL. 61704
Tel. 309-827-9798 or 800-458-5532
Fax 309-829-1993
Ventilation @us.vostermans.com
www.vostermansusa.com

Multifan Ventilation
MFLEX Ventilation Parts

6/30/04

Multifan

VOSTERMANS
VENTILATION

Technical data
60 Hz
standard program
CFM

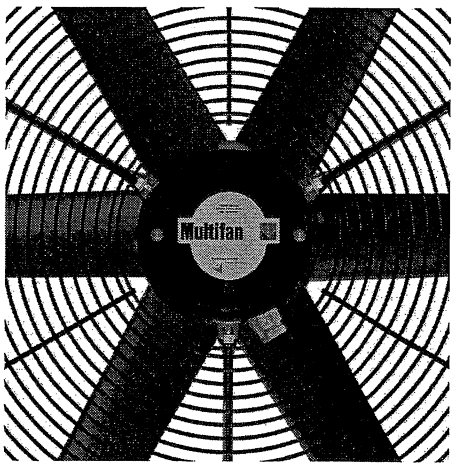

PANEL FANS

120 Volts, 60 Hz, Single Phase

PART #	IMPELLER DIAMETER	MOTOR	RPM	AMPS (120V)	WATTS	CFM/ WATT @0.0 S.P.	NOISE LEVEL dB(A)	CFM (with wire guard)							
								0.00 S.P.	0.05 S.P.	0.10 S.P.	0.125 S.P.	0.15 S.P.	0.20 S.P.	0.25 S.P.	0.50 S.P.
V4E3014M71100	12"	4E30K	1,600	1.1	100	14.40	44	1,440	1,390	1,340	1,310	1,280	1,200	1,100	-
V4E3515M71100	14"	4E35K	1,600	1.7	180	12.06	47	2,170	2,090	2,020	1,980	1,950	1,860	1,780	-
V4E4015M71100	16"	4E40K	1,600	2.3	250	11.84	50	2,960	2,870	2,780	2,740	2,690	2,570	2,440	-
V4E4509M71100	18"	4E45K	1,600	3.0	330	11.48	52	3,790	3,670	3,540	3,480	3,420	3,270	3,120	-
V4E5011M71100	20"	4E50K	1,600	4.4	470	10.32	55	4,850	4,690	4,540	4,470	4,390	4,230	4,060	-
V6E6315M71100	24"	6E63K	1,000	6.7	650	10.94	55	7,110	6,910	6,710	6,610	6,510	6,290	6,060	4,270

—All fans above are speed controllable with optional transformer or electronic controls.
—Contact Bloomington office for availability of other 120V fans.

Vostermans Ventilation

Vostermans Ventilation Inc.
2439 South Main St.
Bloomington, IL. 61704
Tel. 309-827-9798 or 800-458-5532
Fax 309-829-1993
Ventilation @us.vostermans.com
www.vostermansusa.com

Fan Capacities single phase 240 V / 60 Hz (CFM)

Multifan

		Type	Multifan code	0 SP	0.05 SP	0.10 SP	0.125 SP	0.15 SP	0.20 SP	0.25 SP	0.50 SP
1 ~240V 60 Hz	3200 RPM	2E30	V2E30KØ	2.160	2.100	2.050	2.030	2.000	1.960	1.910	1.670
		2E35	V2E35KØ	2.930	2.900	2.820	2.790	2.770	2.710	2.650	2.360
	1600 RPM	4E30	V4E30KØ	1.420	1.360	1.300	1.280	1.260	1.170	-	-
		4E35	V4E35KØ	2.130	2.060	1.980	1.940	1.900	-	-	-
		4E40	V4E40KØ	2.990	2.890	2.800	2.750	2.700	2.590	2.480	-
		4E45	V4E45KØ	3.770	3.650	3.520	3.460	3.400	3.250	3.080	-
		4E50	V4E50KØ	4.890	4.730	4.560	4.470	4.390	4.200	4.010	-
		4E63	V4E63KØ	10.400	10.200	10.000	9.950	9.850	9.700	9.500	8.550
	1000 RPM	6E56	V6E56KØ	6.450	6.150	5.950	5.850	5.700	5.550	5.250	-
		6E63-3PP-30	V6E63K	5.700	5.400	5.050	4.850	4.660	4.270	-	-
		6E63	V6E63KØ	7.150	6.950	5.700	6.600	6.500	6.250	6.000	-
		6E71	V6E71KØ	7.900	7.650	7.400	7.250	7.100	6.850	6.600	-
	800 RPM	8E92-3PP-25	V8E92K	12.100	11.300	10.500	10.100	9.700	8.750	7.750	-

Fan Capacities three phase 240/420 V / 60 Hz (CFM)

		Type	Multifan code	0 SP	0.05 SP	0.10 SP	0.125 SP	0.15 SP	0.20 SP	0.25 SP	0.50 SP
3 ~240/420V 60 Hz	1600 RPM	4D30	V4D30KØ	1.400	1.340	1.280	1.250	1.220	1.150	-	-
		4D35	V4D35KØ	2.200	2.140	2.070	2.030	1.990	1.920	1.830	-
		4D40	V4D40KØ	2.860	2.760	2.670	2.620	2.570	2.470	2.360	-
		4D45	V4D45KØ	3.720	3.600	3.490	3.430	3.370	3.230	3.060	-
		4D50	V4D50KØ	4.910	4.790	4.670	4.600	4.530	4.400	4.250	-
		4D56	V4D56KØ	7.800	7.650	7.500	7.400	7.350	7.200	7.050	6.150
		4D63	V4D63K	10.600	10.500	10.300	10.200	10.100	9.950	9.750	8.800
		4D71	V4D71KØ	13.600	13.400	13.200	13.100	13.000	12.800	12.500	11.500
	1000 RPM	6D50	V6D50KØ	4.200	4.040	3.820	3.730	3.590	3.310	3.010	
		6D56	V6D56KØ	4.480	4.290	4.070	3.950	3.850	3.590	3.280	
		6D63	V6D63KØ	7.650	7.400	7.100	6.900	6.750	6.450	6.100	
		6D71	V6D71KØ	10.000	9.600	9.250	9.000	8.850	8.450	8.050	
	800 RPM	8D71	V8D71KØ	8.650	8.200	7.700	7.500	7.300	6.650	6.100	
		8D92-3PP-21	V8D92KØ	12.000	11.400	10.700	10.400	10.000	9.250	8.350	

* E = Electronically controllable (electronic voltage control by TRIAC/SCR), T = Trafo controllable (voltage control by transformer), F = (Frequency controllable by frequency controller). A frequency controller in combination with a single-phase motor is possible. The use of an anti-resonance strip is highly recommended. Inform about possibilities.
** Sound pressure level measured at 7 m. free blowing distance
All air capacities without wire guard. All motors meet the IP55 standard.

Technical Data single phase 240 V / 60 Hz (CFM)

Multifan

		ø (inch)	Type	Multifan code	I_{nom} (A)	I_{max} (A)	P_{in} (W)	Controllability (*)	L_w dB(A) (**)	CFM/W	Cond. uF/400
1 ~240V 60 Hz	3000 RPM	12"	2E30	V2E30KØ	1,54	1,85	340	E/T	61	6,4	5
		14"	2E35	V2E35KØ	1,96	2,35	430	E/T	65	6,8	6
	1600 RPM	12"	4E30	V4E30KØ	0,58	0,70	110	E/T	45	12,9	2
		14"	4E35	V4E35KØ	0,93	1,12	170	E/T	48	12,5	3
		16"	4E40	V4E40KØ	1,14	1,37	250	E/T	51	12,0	5
		18"	4E45	V4E45KØ	1,42	1,70	310	E/T	53	12,2	6
		20"	4E50	V4E50KØ	1,89	2,27	420	E/T	55	11,6	20
		24"	4E63	V4E63KØ	8,29	9,95	1.750	-	70	5,9	22
	1000 RPM	22"	6E56	V6E56KØ	2,73	3,28	650	E/T	53	9,9	16
		24"	6E63-3PP-30	V6E63K	1,60	1,92	350	E/T	52	16,3	6
		24"	6E63	V6E63KØ	2,91	3,49	680	E/T	56	10,5	16
		28"	6E71	V6E71KØ	3,19	3,83	720	E/T	61	11,0	16
	800 RPM	36"	8E92-3PP-25	V8E92K	3,76	4,51	800	T	61	15,1	16

Technical Data three phase 240/420 V / 60 Hz (CFM)

		ø (inch)	Type	Multifan code	I_{nom} (A) 240 V	I_{nom} (A) 420 V	Imax (A)	P_{in} (W)	Controllability (*)	L_w dB(A) (**)	CFM/W
3 ~240/420V 60 Hz	1600 RPM	12"	4D30	V4D30KØ	0,45	0,26	0,50/0,29	110	T	45	12,7
		14"	4D35	V4D35KØ	0,83	0,48	0,91/0,53	180	T	47	12,2
		16"	4D40	V4D40KØ	0,88	0,51	0,97/0,56	220	T	50	13,0
		18"	4D45	V4D45KØ	1,06	0,61	1,16/0,67	280	T	52	13,3
		20"	4D50	V4D50KØ	1,63	0,94	1,80/1,04	420	T	56	11,7
		22"	4D56	V4D56KØ	3,65	2,11	4,02/2,32	1.180	T	62	6,6
		24"	4D63	V4D63K	5,42	3,13	5,96/3,44	1.690	T	66	6,3
		28"	4D71	V4D71KØ	7,67	4,43	8,66/5,00	2.430	-	70	5,4
	1000 RPM	20"	6D50	V6D50KØ	1,21	0,70	1,33/0,77	330	T	49	12,7
		22"	6D56	V6D56KØ	1,39	0,80	1,52/0,88	430	T	52	10,4
		24"	6D63	V6D63KØ	2,29	1,32	2,51/1,45	670	T	54	11,4
		28"	6D71	V6D71KØ	3,19	1,84	3,81/2,20	943	T	56	10,6
	800 RPM	28"	8D71	V8D71KØ	2,60	1,50	3,12/1,80	580	T	56	14,9
		36"	8D92-3PP-21	V8D92KØ	3,83	2,21	4,21/2,43	780	T	61	15,4

* E = Electronically controllable (electronic voltage control by TRIAC/SCR), T = Trafo controllable (voltage control by transformer), F = (Frequency controllable by frequency controller). A frequency controller in combination with a single-phase motor is possible. The use of an anti-resonance strip is highly recommended. Inform about possibilities.

** Sound pressure level measured at 7 m. free blowing distance

All air capacities without wire guard. All motors meet the IP55 standard.

Dimensions

Impeller range (inch)	Number of poles	Size (inch) A	B	C	D max	E	F	G	Dimensions packing (inch) (lxwxh)
12	2, 4	15.56	17.43	13.40	(7.56)	3.31	0.30	1.42	17.93x17.93x12.25
14	2, 4	17.53	19.40	15.37	(7.56)	3.31	0.30	1.42	19.90x19.90x12.25
16	4, 6	19.50	21.37	17.34	(7.56)	3.31	0.30	1.42	21.87x21.87x12.25
18	4, 6	21.47	23.34	19.31	(7.56)	3.31	0.30	1.42	23.84x13.84x12.25
20	4, 6	23.64	25.51	21.28	(7.56)	3.31	0.30	1.42	25.81x25.81x12.25
22	4, 6	25.22	27.58	23.64	9.73	4.14	0.39	1.58	27.17x28.17x12.25
24	4, 6	28.17	30.54	26.40	9.73	4.14	0.39	1.58	31.13x31.13x15.60
28	4, 6, 8	31.13	33.49	29.16	9.73	4.14	0.39	1.58	34.08x34.08x15.60
36	6, 8	37.31	39.60	37.04	9.73	3.36	0.39	1.58	motor: 14.61x8.75x8.51 frame: 41.37x41.37x6.70

Dimensional Scheme

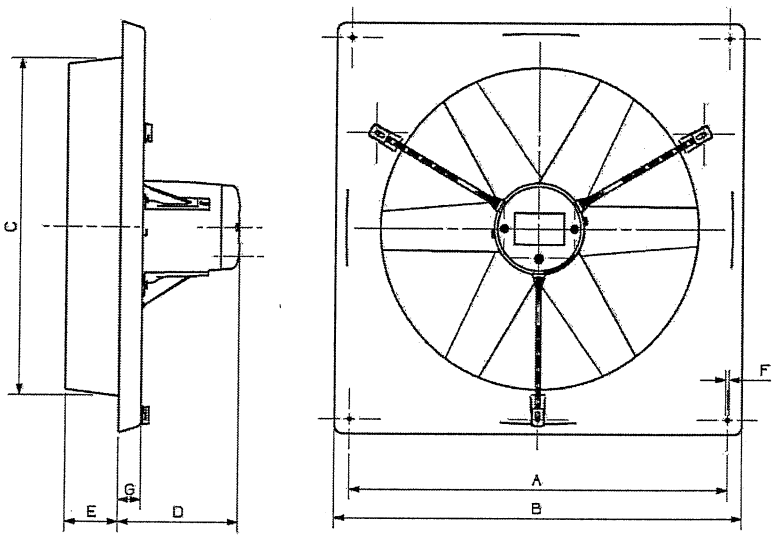

VOSTERMANS
VENTILATION

Vostermans Ventilation B.V.
P.O. Box 3025
NL-5902 RA Venlo – Holland
Tel. +31 (0)77 389 32 32
Fax +31 (0)77 382 08 93
ventilation@vostermans.com
www.vostermans.com

Vostermans Ventilation Inc.
2439 S.Main St. – USA
Bloomington, IL 61704
Tel. +1 309 827 - 9798
Fax +1 309 829 - 1993
ventilation@vostermansusa.com
www.vostermansusa.com

Vostermans Ventilation S.A.R.L.
B.P. 1801
27018 Evreux Cedex
France
Tel. +33 (0)2 32 38 11 00
Fax +33 (0)2 32 33 37 12
ventilation@vostermansfrance.com
www.vostermans.com

Vostermans Ventilation Sdn. Bhd.
330, Lot 2593, Jln Seruling 59, Kws3,
Tmn Klang Jaya, 41200, Klang,
Selangor D.E., Malaysia
Tel. +60 (0)33324 3638 (HL)
Fax +60 (0)33324 1239
ventilation@vostermansasia.com
www.vostermans.com

Vostermans Ventilation B.V. develops, manufactures and distributes the full line of:

Multifan

Subject to alterations 08/2011

Multifan System 1

Application:
Designed to be an energy efficient method of exhausting air from buildings. Allows for quick installation in a wall. Typically used in warehouses, barns and arenas.

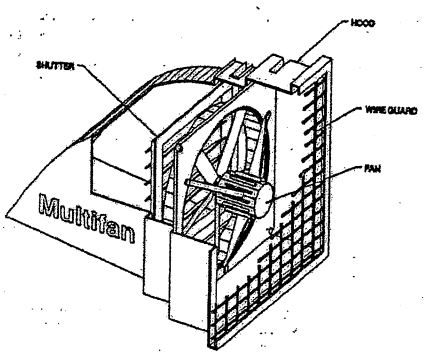

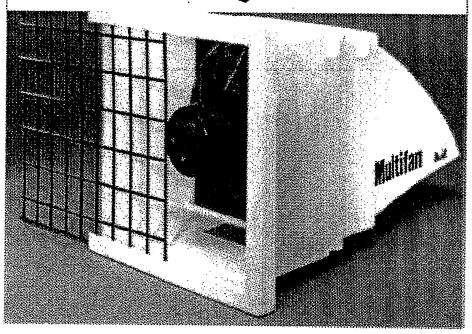

Component Specifications:

- Shipped fully assembled, includes fan, hood, shutter, and wire guard.
- Sealed severe duty, wash down, Class F insulated, ball bearings, front & rear, motor.
- Aerodynamic polyethylene hood allows air exhaust without external wind interference.
- Can be flush mounted to wall with four lag bolts.
- Includes fan, hood, shutter, and wireguard.
- Speed controllable.
- Available in both 120 and 240 volts.
- Motor covered by Vostermans limited 3-year warranty.

Performance Specifications:

Part #	Volts	Impeller Dia.	Motor	Amps	RPM	CFM 0.0 SP	CFM 0.5 SP	CFM 0.1 SP	Rough Opening Req'd (Square)
S1124E2Q	240 VOLTS	12"	4E30Q	0.5	1,600	1,322	1243	1159	19 1/4"
S1164E2Q		16"	4E40Q	1.1	1,600	2,383	2276	2159	23 1/4"
S1184E2Q		18"	4E45Q	1.5	1,600	3,279	3148	3005	25 1/4"
S1204E2Q		20"	4E50Q	2	1,600	4,259	4042	3883	27 1/4"
S1246E2Q		24"	6E63Q	3.1	1,000	6,203	5981	5736	31 3/4"
S1124E1Q	120 VOLTS	12"	4E30Q	1.1	1,600	1,282	1206	1124	19 1/4"
S1164E1Q		16"	4E40Q	2.3	1,600	2,312	2208	2094	23 1/4"
S1184E1Q		18"	4E45Q	3	1,600	3,180	3053	2915	25 1/4"
S1204E1Q		20"	4E50Q	4	1,600	4,131	3921	3767	27 1/4"
S1246E1Q		24"	6E63Q	5.6	1,000	6,017	5802	5564	31 3/4"

Vostermans Ventilation

Vostermans Ventilation Inc.
2439 South Main St.
Bloomington, IL. 61704
Tel. 309-827-9798 or 800-458-5532
Fax 309-829-1993
Ventilation @us.vostermans.com
www.vostermansusa.com

Multifan Ventilation

MFFLEX Ventilation Parts

1/30/04

Vostermans
Ventilation

1/10/05

CONTROLS

This is a summary of the speed, temperature, and humidity controls that are offered by Vostermans. More detailed specifications are available on each. Most of these products are kept in Bloomington inventory, however, the quantities vary.

Also available are a range of multi-function, programmable controls. Please contact Bloomington for more information.

Variable Speed Controls

PM-3 (part # RMVPM-3):
- replaces motor end cap on Multifan motors only, with integrated wiring to motor (single motor control).
- manual rotary control knob, controls on-off also.
- 120V/240V, single phase.
- 4.8 amps, maximum.
- LIST PRICE: $145.00 ('04 price)

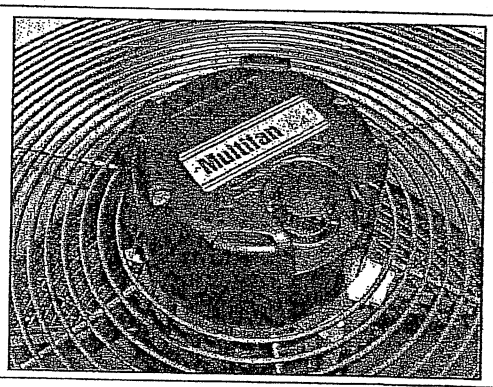

MS-8 (part # AEMS-8/S)
- IP54, plastic enclosure, can be remote mounted, away from the fan.
- 120V/240V, single phase.
- manual rotary control knob, controls on/off also.
- controls one or more fans, up to 8 amps total load.
- LIST PRICE: $143.00 ('04 price)

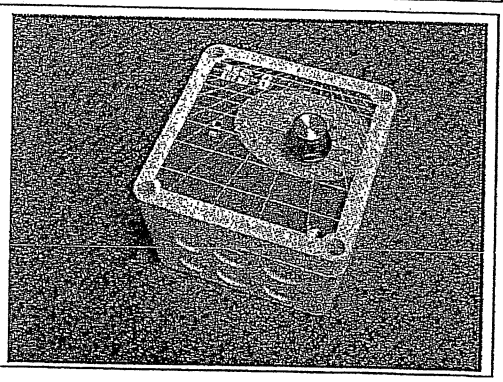

MVS-1 (part # VFMVS-1/S)
- electronic, manual variable control.
- controls one group of fans, up to a total of 12 amps maximum.
- 120V/240V, single phase.
- PVC enclosure, can be remote mounted, away from the fans.
- LIST PRICE: $159.00 ('04 price)

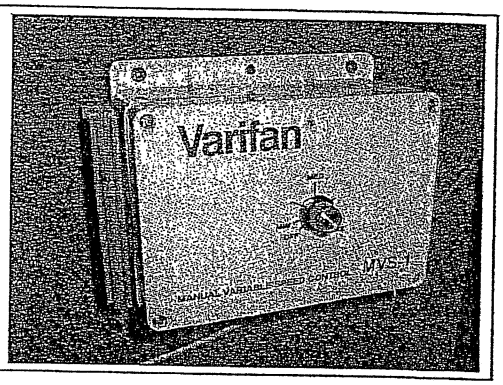

PANEL FANS

240 to 460 Volts, 60 Hz, Three Phase

PART #		IMPELLER DIAMETER	MOTOR	RPM	AMPS	WATTS	CFM/ WATT 0.0 S.P.	NOISE LEVEL dB(A)	CFM (with wire guard) 0.00 S.P.	0.05 S.P.	0.10 S.P.	0.125 S.P.	0.15 S.P.	0.20 S.P.	0.25 S.P.	0.50 S.P.
V4D3007M71100	460 VOLTS	12"	4D30Q	1,600	0.2	110	13.09	44	1,440	1,390	1,340	1,310	1,280	1,200	1,100	-
V4D3505M71100		14"	4D35Q	1,600	0.5	180	12.06	47	2,170	2,090	2,020	1,980	1,950	1,860	1,780	-
V4D4009M71100		16"	4D40Q	1,600	0.5	230	12.87	50	2,960	2,870	2,780	2,740	2,690	2,570	2,440	-
V4D4517M71100		18"	4D45Q	1,600	0.6	300	12.63	52	3,790	3,670	3,540	3,480	3,420	3,270	3,120	-
V4D5021M71100		20"	4D50Q	1,600	0.9	440	11.02	55	4,850	4,690	4,540	4,470	4,390	4,230	4,060	-
V6D5607M71100		22"	6D56Q	1,000	0.8	430	10.42	52	4,480	4,290	4,070	3,950	3,850	3,590	3,280	-
V4D6317M71100		24"	4D63Q	1,600	3.0	1750	5.87	65	10,280	10,130	9,980	9,910	9,840	9,680	9,530	8,690
V6D6324M71100		24"	6D63Q	1,000	1.5	700	10.34	54	7,240	6,960	6,690	6,550	6,410	6,100	5,770	-
V4D7123M71100		28"	4D71Q	1,600	5.0	2470	5.51	69	13,610	13,430	13,430	13,170	13,080	12,910	12,740	11,770
V4D3005M71100	240/400 VOLTS	12'	4D30Q	1,600	0.4/0.2	110	13.09	44	1,440	1,390	1,340	1,310	1,280	1,200	1,100	-
V4D3506M71100		14"	4D35Q	1,600	0.9/0.5	180	12.06	47	2,170	2,090	2,020	1,980	1,950	1,860	1,780	-
V4D4012M71100		16"	4D40Q	1,600	0.9/0.5	230	12.87	50	2,960	2,870	2,780	2,740	2,690	2,570	2,440	-
V4D4509M71100		18"	4D45Q	1,600	1.1/0.6	300	12.63	52	3,790	3,670	3,540	3,480	3,420	3,270	3,120	-
V4D5020M71100		20"	4D50Q	1,600	1.6/0.9	440	11.02	55	4,850	4,690	4,540	4,470	4,390	4,230	4,060	-
V4D5612M71100		22"	4D56Q	1,600	3.6/2.1	1170	6.47	61	7,570	7,430	7,290	7,220	7,150	7,010	6,870	6,090
V6D5606M71100		22"	6D56Q	1,000	1.4/0.8	430	10.42	52	4,480	4,290	4,070	3,950	3,850	3,590	3,280	-
V4D6312M71100		24"	4D63Q	1,600	5.2/3.0	1750	5.87	65	10,280	10,130	9,980	9,910	9,840	9,680	9,530	8,690
V6D6313M71100		24"	6D63Q	1,000	2.3/1.5	700	10.34	54	7,240	6,960	6,690	6,550	6,410	6,100	5,770	-
V4D7110M71100		28"	4D71Q	1,600	8.3/4.8	2470	5.51	69	13,610	13,430	13,430	13,170	13,080	12,910	12,740	11,770
V6D7112M71100		28"	6D71Q	1,000	3.2/1.8	930	9.87	56	9,180	8,840	8,500	8,310	8,130	7,740	7,350	-
V8D9200M71100		36"	8D92Q	800	3.3/1.9	710	15.68	61	11,130	10,480	9,780	9,420	9,050	8,170	7,010	-

—All fans above, except the 28" fan with 4D71Q motor, are speed controllable with frequency controllers (not available at Vostermans). The 28" fan with 4D71Q motor is a non-controllable hi-performance fan.

Varifan® SA-10

VARIABLE SPEED CONTROL

DESCRIPTION

The SA-10 Variable Speed control is designed to control 1 group of variable speed fan.

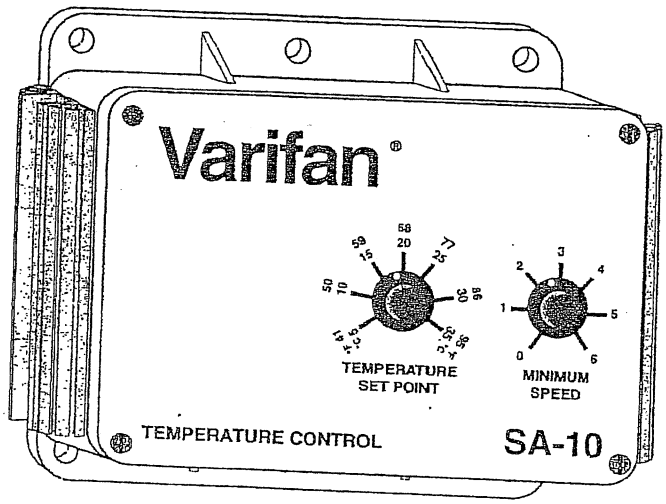

FEATURES

- PVC Non-Corrosive enclosure.
- Fused and Transient Suppression.
- EMI filters
- Two Year Warranty.

SPECIFICATIONS

INPUT	:115/230V., 60Hz.
OUTPUT	:10 AMP. NOMINAL
	:15 AMP. MAX
OPTIONS	:SA-10/50 50Hz Power source

INSTALLATION

1. Must be installed by a certified electrician according to the local code.
2. Unscrew the cover from the base.
3. Connect the fan and the main voltage to the 4 screw terminal (see wiring diagram).

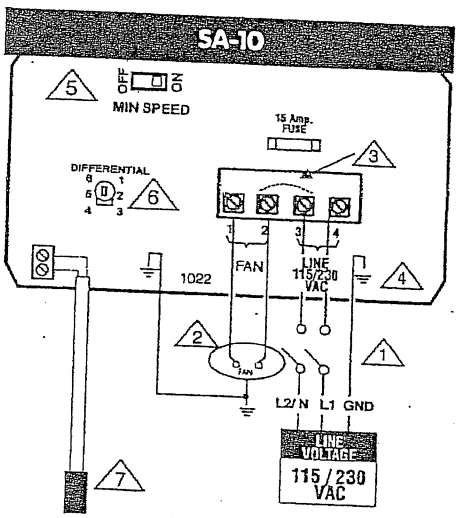

NOTES

1. Power cut and protection devices in case of overload. 3. Terminals 2 and 3 are connected together in the unit circuit.
2. Only use fans that have thermical protection device. 4. Connect the bare ground wire to the green wire inside the case.
5. DIP Switch "MIN SPEED".

ON When the temperature is below the temperature set point, the fan runs at minimum speed as adjusted by the external potentiometer.

OFF Fan shuts off when the temperature is below the temperature set point.

6. POTENTIOMETER "DIFFERENTIAL"
To increase differential turn left; to reduce it, turn right.

7. Temperature probes can be extended up to 500 feet (150 meters). For probes longer than 10 feet (3 meters) use shielded cable #18AWG min, with the shield grounded. IMPORTANT: The probe should not routed along high voltage wires (115V).

WARRANTY

The manufacturer's equipment and supplied components are passed through rigorous inspection to assure optimum quality of products and reliability. ndividual controls are factory tested under load, however the possibility of equipment failure and/or malfunction may still exist.

For service, contact you local retail outlet or distributor. The warranty period shall be two years from the date of manufacture. Proof of purchase is required for validation.

ases, the warranty shall apply only to defects in workmanship and specifically exclude any damage caused by over-voltage, short circuit, misuse, acts of andalism, fortuitous events, acts of God, flood, fire, hail or natural disaster. This warranty becomes invalid should the installation have been made contrary to ur instructions.

The manufacturer assumes only those obligations set forth herein, excluding all other warranties or obligations. This warranty sipulates that in all cases the nanufacturer shall be liable only for the supply of replacement parts or goods and shall not be liable for any personal injury, damages, loss of profits, halted perations, fine contravention of the law or damages to the production of the PURCHASER and the PURCHASER shall take up the defence and hold the nufacturer faultless regarding any legal or extra legal proceeding, notice, or claim by the customer or by a third party, and regarding any legal and extra legal nses and fees brought forward on by such damages.

Variable Speed Controls-continued

MVS-2 (part # VFMVS-2/S)

- ····· same as MVS-1 above, except can control two groups of fans, 6 amps maximum per group.
- ···· LIST PRICE: $254.00 ('04 price)

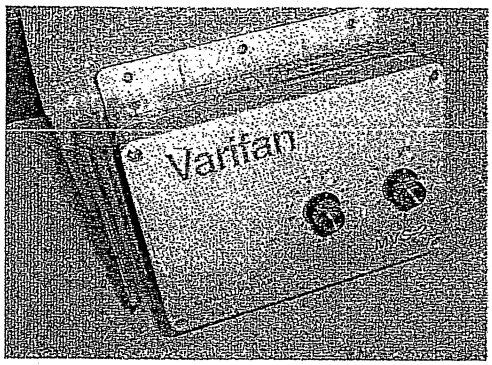

SA-10 (part # VFSA-10/S)

- ····· electronic, automatic variable speed control based on selected temperature.
- ····· controls one group of fans up to total load of 12 amps maximum.
- ····· internal switch allows fan to either run minimum speed or turn the fan off when below set temperature.
- ···· LIST PRICE: $242.00 ('04 price)

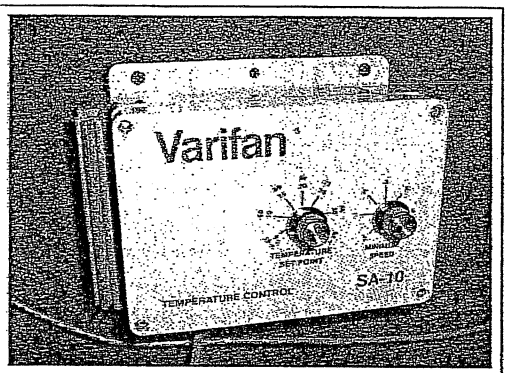

KBWC speed controls:

- ····· low cost, manual rotary speed control with on/off, to be mounted in 2"X 4" electrical wall box.

110V:	LIST PRICE:
KBWC-16 (6 amp)	$18.00 ('04 price)
KBWC-18 (8 amp)	$40.00 "
220V:	
KBWC-26K (6 amp)	$42.00 "
KBWC-28K (8 amp)	$55.00 "

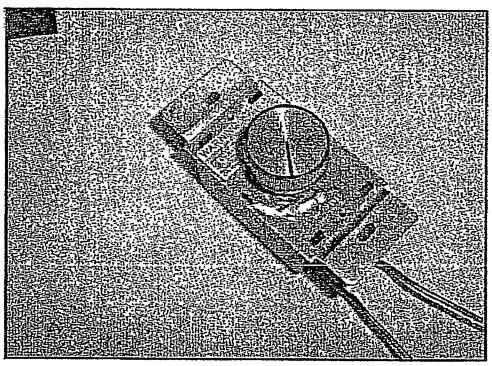

STW manually operated, step transformer, speed controls.

- ····· 120V/240V, single phase.
- ····· six steps (speeds), from 30% to 100% .
- ····· die cast aluminum housing with seal.

	LIST PRICE:
RSTW03CAM1 (3 amps)	$152.00 ('04 price)
RSTW05CAM1 (5 amps)	$172.00 "
RSTW07CAM1 (7 amps)	$210.00 "

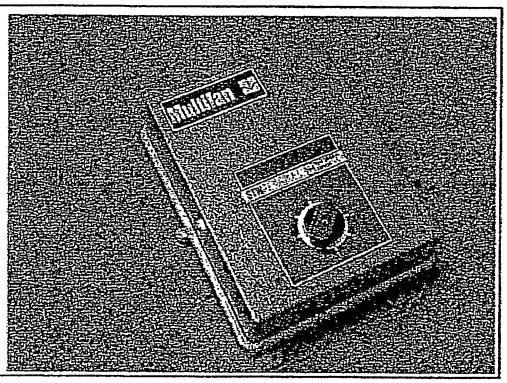

CFT

COMPOSITE FAN TECHNOLOGY

Over 50 years Experience

The FRP industrial fans manufactured by Composite Fan Technology (CFT) answers the need for a fan designed to achieve maximum corrosion resistance while offering rugged construction, ease of maintenance and effecient operation. The FRP fan is well recognized for its proven successes in handling a wide range of corrosive applications, notably in chemical processing, pulp & paper, fertilizer industries as well as waste water treatment plants; or wherever a need for corrosion resistance is a requirement.

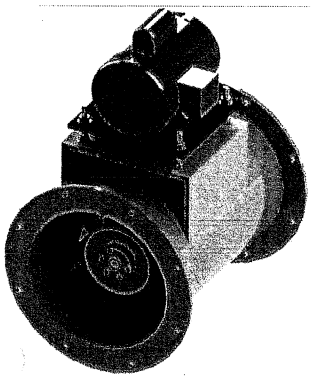

Tubal Axial Fans

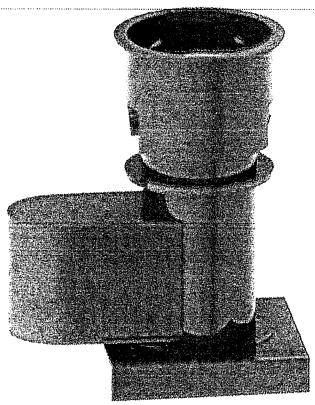

Roof Exhaust Axial Fans

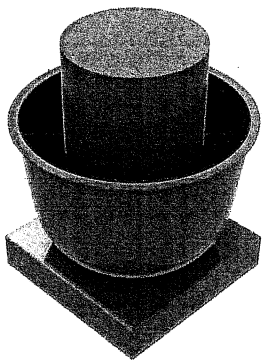

Roof Exhaust Centrifugal Fans

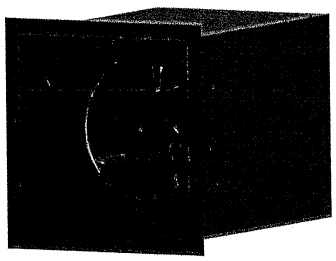

Wall Box Fans

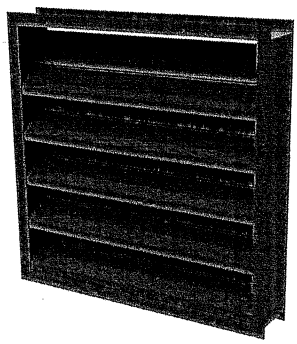

FRP Louvers/Dampers

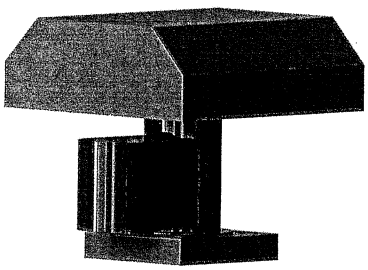

Roof Supply Fans

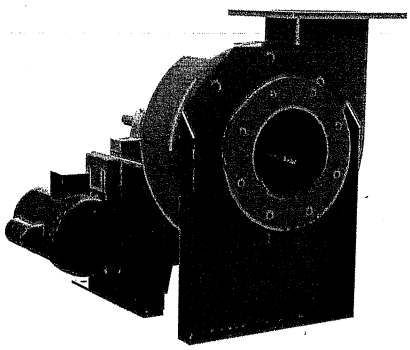

Industrial Blowers

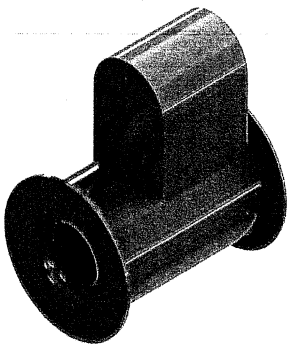

Inline Centrifugal Fans

Composite Fan Technology
A Division of Metal Cladding Inc.
230 S. Niagara Street | Lockport, NY 14094
Phone: 716-434-5513 | Fax: 716-439-4010

Email: info@compositefantechnology.com
www.compositefantechnology.com

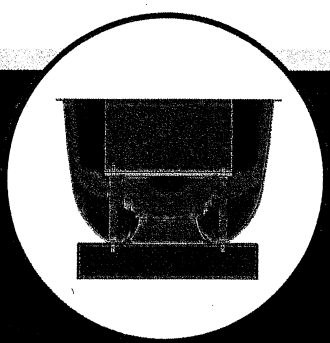

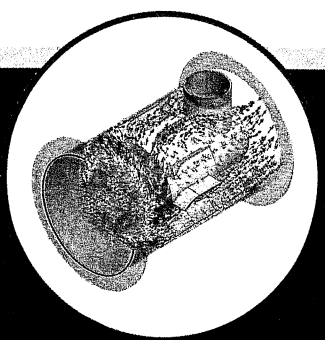

CFT

MODEL WBF

Fiberglass Wall Box Fan

CFT
COMPOSITE FAN TECHNOLOGY

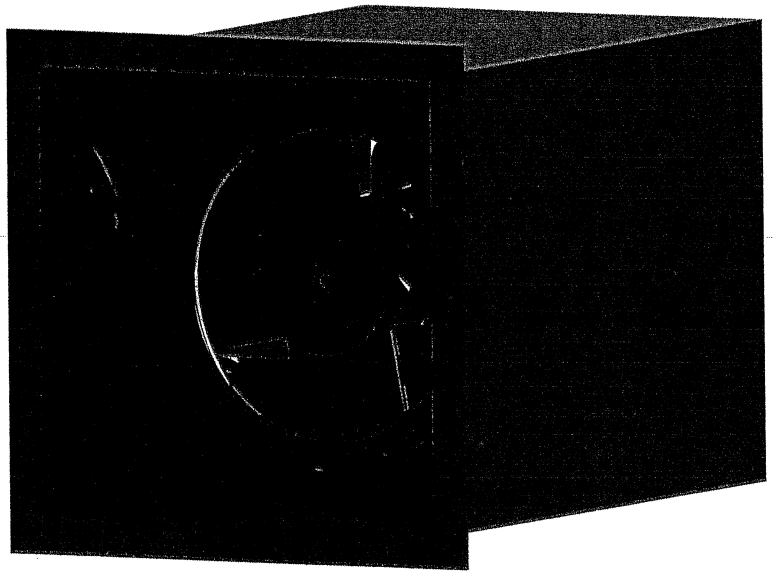

Composite Fan Technology manufactures a complete line of fiberglass fans. CFT fans are designed to achieve maximum corrosion resistance while offering rugged construction, ease of maintenance and efficient operation.

Standard Features

13 sizes available (12" to 60" diameter)

Capacities up to 20,000 CFM

Pressures up to 20" SP

Highly efficient airfoil blade propeller constructed out of Derakane 510A vinyl ester resin

Solid fiberglass housing constructed out of Hetron FR 650 polyester resin

All resin is fire retardant with a Class 1 flame spread of 25 or less per ASTM E-84

Standard housing color is gray

All resin contains UV inhibitor

C-glass surface veil on airstream surfaces

316 SST hardware

Flanged fiberglass wall sleeve

Fiberglass motor mount

TEFC motor (1/2 HP minimum)

Optional Accessories:

FRP damper, static grounding of airstream, disconnect switches, inlet/outlet guards, FRP weather hood, custom colors, synthetic surface veil, and custom resin formulations are available.

Composite Fan Technology
A Division of Metal Cladding Inc.
230 S. Niagara Street | Lockport, NY 14094 | Phone: 716-434-5513 | Fax: 716-439-4010
Email: info@compositefantechnology.com

MODEL ILC

Fiberglass Inline Centrifugal Fan

CFT
COMPOSITE FAN TECHNOLOGY

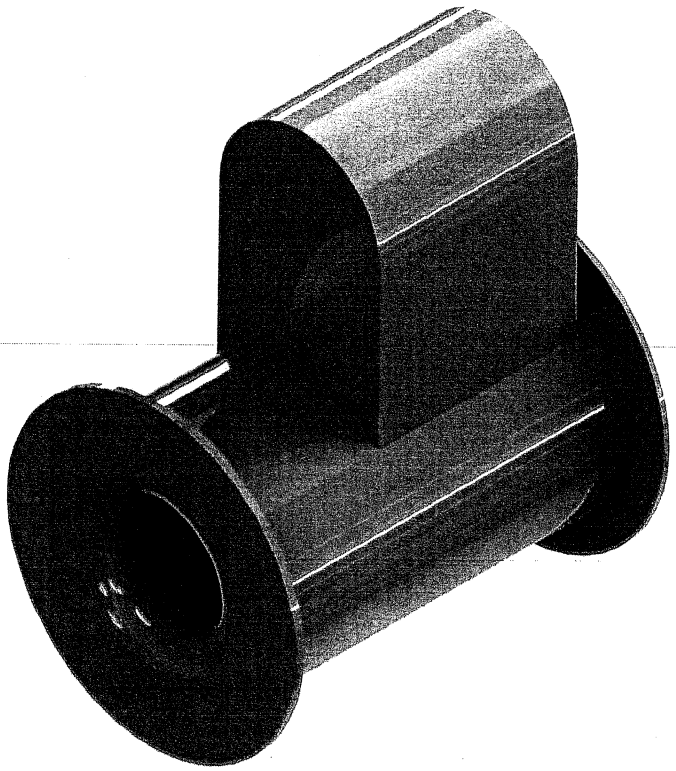

Composite Fan Technology manufactures a complete line of fiberglass fans. CFT fans are designed to achieve maximum corrosion resistance while offering rugged construction, ease of maintenance and efficient operation.

Standard Features

6 sizes available (12 inches to 30 inches)

Capacities up to 20,000 CFM

Pressures up to 9" SP

Highly efficient backward curved solid fiberglasss impeller constructed out of Derakane 510A vinyl ester resin

Solid fiberglass housing constructed out of Hetron FR 650 polyester resin

All resin is fire retardant with a Class 1 flame spread of 25 or less per ASTM E-84

Standard housing color is gray

All resin contains UV inhibitor

C-glass surface veil on airstream surfaces

316 SST shaft and hardware

EPDM double lip shaft seal

Polyethelene extended grease lines

Pillow block bearings

Fiberglass weather cover/guard

Adjustable motor plate for belt tensioning

TEFC motor (1/2 HP minimum)

Available with horizontal hanging flanges, vertical mounting brackets and horizontal foot mount.

Optional Accessories:

Static grounding of airstream, disconnect switches (factory mounted), inlet/outlet guards, exotic shaft material and or hardware available, custom colors, synthetic surface veil, inlet/outlet transitions, and custom resin formulations are available.

Composite Fan Technology
A Division of Metal Cladding Inc.
230 S. Niagara Street | Lockport, NY 14094 | Phone: 716-434-5513 | Fax: 716-439-4010
Email: info@compositefantechnology.com

MODEL CVC

Fiberglass Upblast Centrifugal Fan

CFT
COMPOSITE FAN TECHNOLOGY

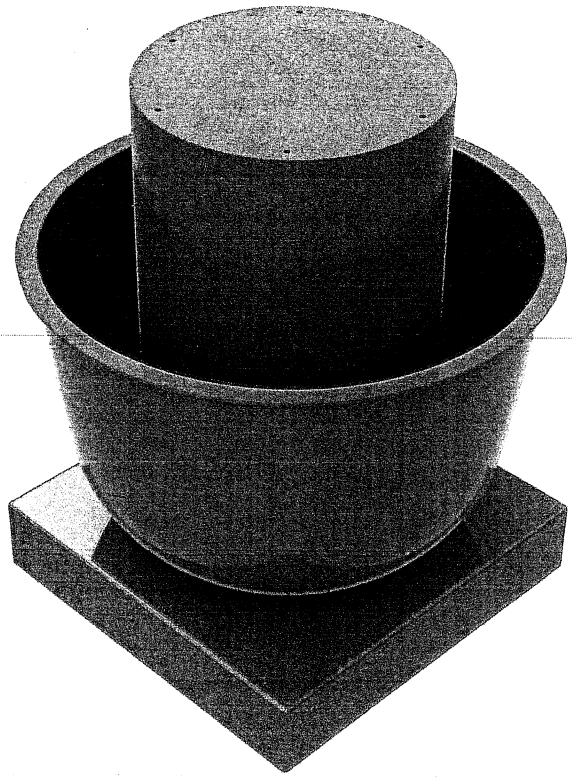

Composite Fan Technology manufactures a complete line of fiberglass fans. CFT fans are designed to achieve maximum corrosion resistance while offering rugged construction, ease of maintenance and efficient operation.

Standard Features

5 sizes available (10 inches to 24 inches)

Capacities up to 20,000 CFM

Pressures up to 20" SP

Highly efficient backward inclined solid fiberglass impeller constructed out of Derakane 510A vinyl ester resin

Solid fiberglass housing constructed out of Hetron FR 650 polyester resin

All resin is fire retardant with a Class 1 flame spread of 25 or less per ASTM E-84

Standard housing color is gray

All resin contains UV inhibitor

C-glass surface veil on airstream surfaces

316 SST shaft (belt drive only)

EPDM double lip shaft seal

Heavy duty pillow block bearings (belt drive only)

V-belt drive with 1.5 S.F. minimum (belt drive only)

TEFC motor (1/2 HP minimum)

Fiberglass curb cap or fiberglass wall sleeve

Optional Accessories:

Static grounding of airstream, roof curb, dampers, disconnect switches, inlet/outlet guards, exotic shaft material and/or hardware available, custom colors, synthetic surface veil, and custom resin formulations are available.

Composite Fan Technology
A Division of Metal Cladding Inc.
230 S. Niagara Street | Lockport, NY 14094 | Phone: 716-434-5513 | Fax: 716-439-4010
Email: info@compositefantechnology.com

PLASTEC™

Plastec Ventilation, Inc.

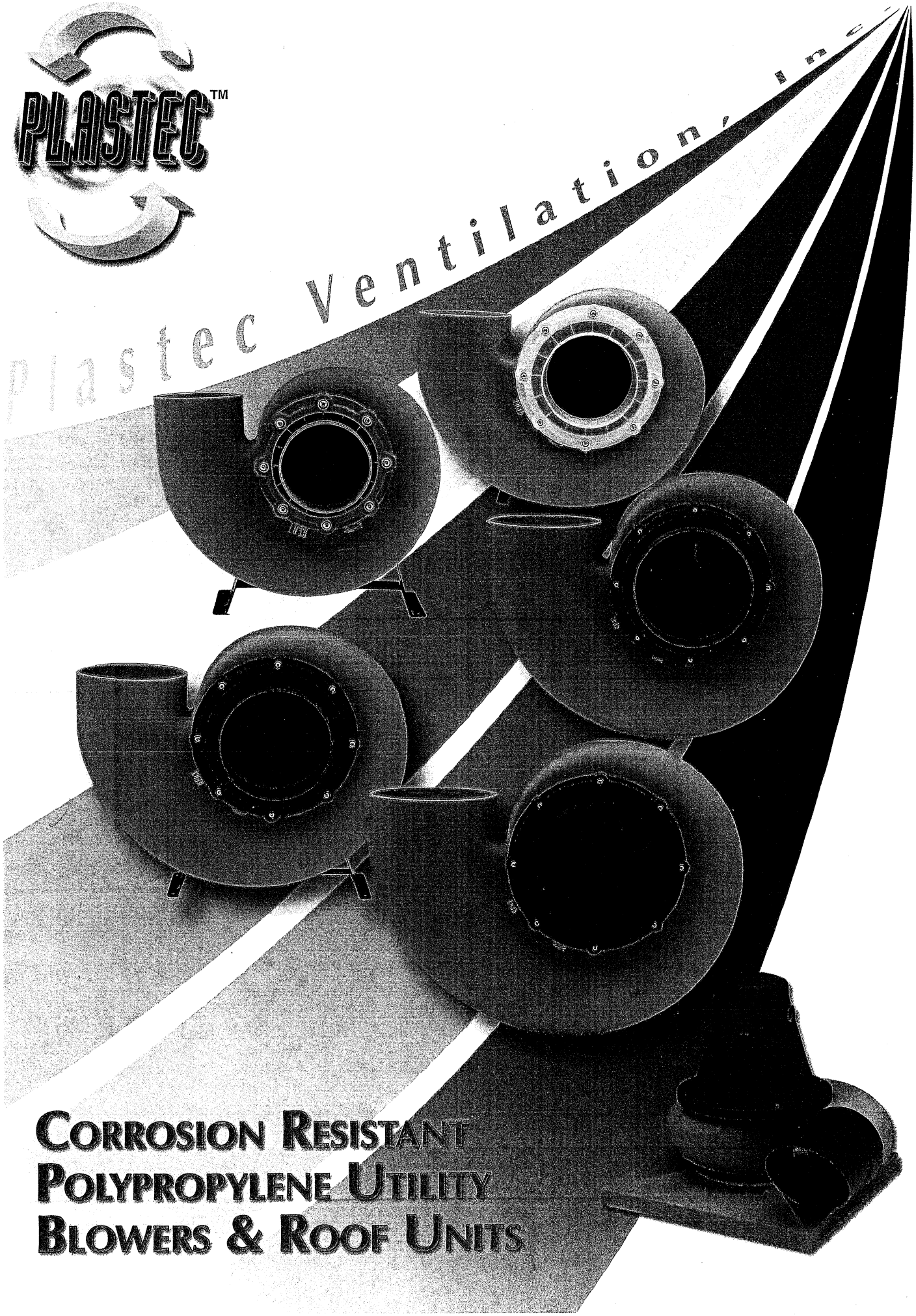

Corrosion Resistant Polypropylene Utility Blowers & Roof Units

Corrosion Resistant Polypropylene Fans & Blowers

Innovative Design
20 to 4,000 CFM and up to 8" Static Pressure

PLASTEC SERIES

With extensive experience in the field of fume extraction systems, Plastec Ventilation, Inc. offers a comprehensive line of high quality corrosion resistant Fans and Blowers dedicated to the needs of the industry.

Typically, these polypropylene fans are installed in highly aggressive environments where metal fans with epoxy coating or FRP fans will fail.

Originally designed in Europe, Plastec exhaust systems are currently distributed in more than 30 countries where they are widely recognized for their unique and high level of performance. Additionally, we are very committed to quick and reliable service and being prepared to respond to time sensitive requirements.

PLASTEC Products Benefits:

- Performance Range
- Superior Quality
- Durability
- Low Noise Level
- Cost-Effective
- High Temperature Resistance
- Ease of Installation

Housings are fabricated from strong high density seamless rotomolded UV treated polypropylene for complete corrosion protection. The Inlet and Outlet are designed for easy duct connection.

Impellers and Motor Shaft Bushings are constructed of injection molded polypropylene, or optional Stainless Steel on certain models, and both electronically and dynamically balanced for best performance. A polypropylene Shaft Hub Cap provides additional protection to the motor shaft and comes with all plastic impeller models.

Motors are mounted outside the air stream for maximum protection from corrosive exhaust gases. Ball Bearings are sealed and permanently lubricated, providing for a long and maintenance free operation. Many models are available with Explosion-Proof Motors for Class I, Group D atmospheres.

Environmental operation for the polypropylene casing is recommended up to 190 degrees Fahrenheit (90C).

Motor Support Stand is available in enamel coated steel providing rigid support for the fan and motor. A polypropylene Weather Hood Enclosed Pedestal is another option providing motor protection from the weather and corrosive fumes (see accessories).

Accessories are available for the Plastec Series, such as Dampers, Connectors, Duct Reducers, Exhaust Guards and etc.

Plastec Series Performance Range

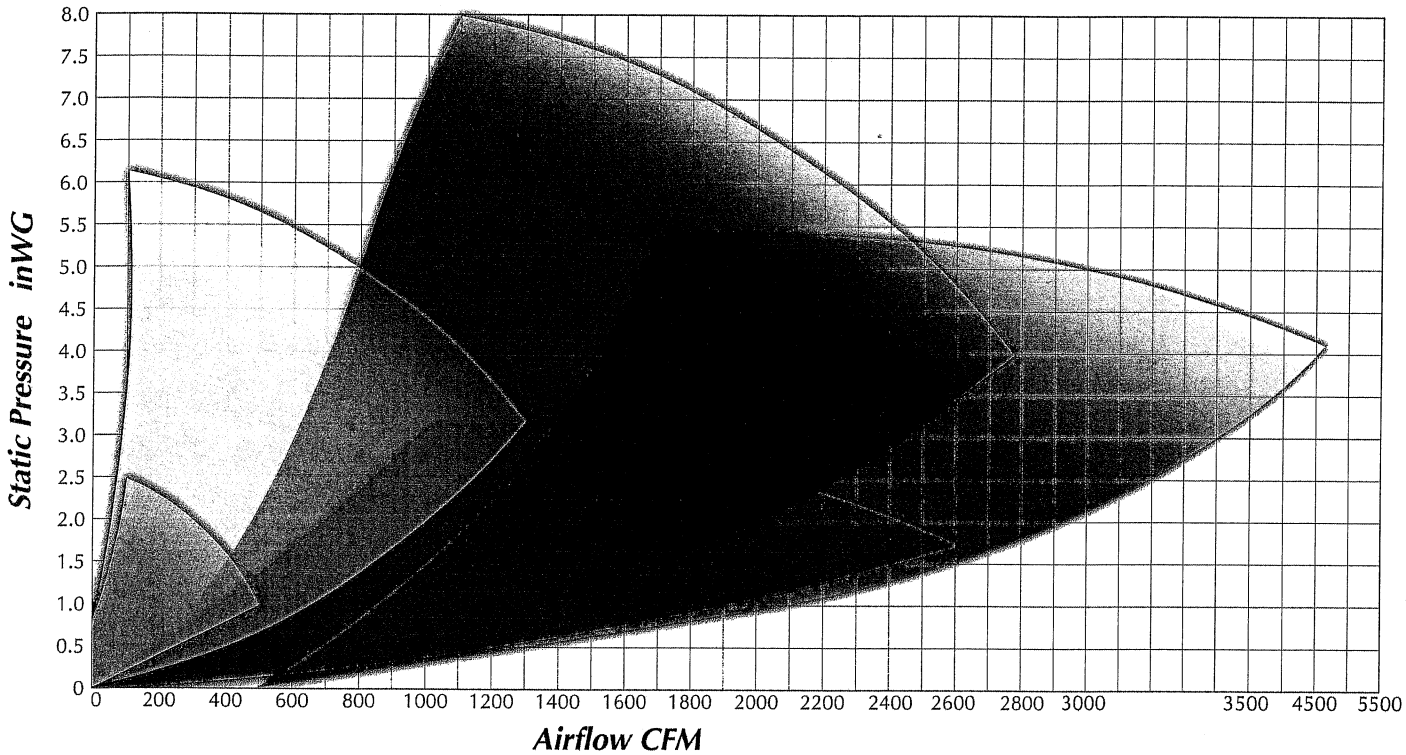

See individual Performance and Dimensional Charts for a more detailed presentation

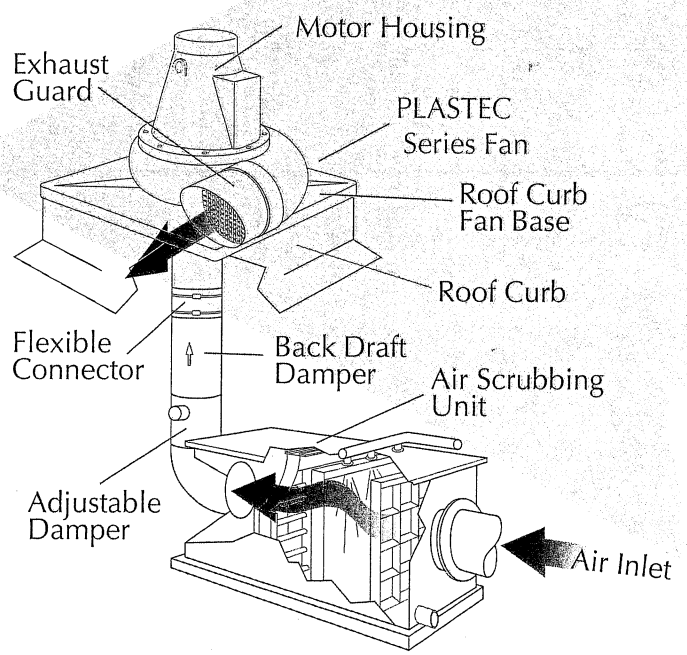

Typical Installation with Roof Unit Option

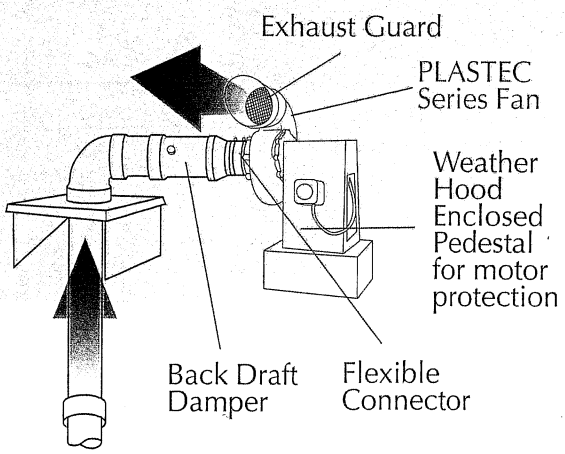

Typical Installation with Weather Hood Enclosed Pedestal Option